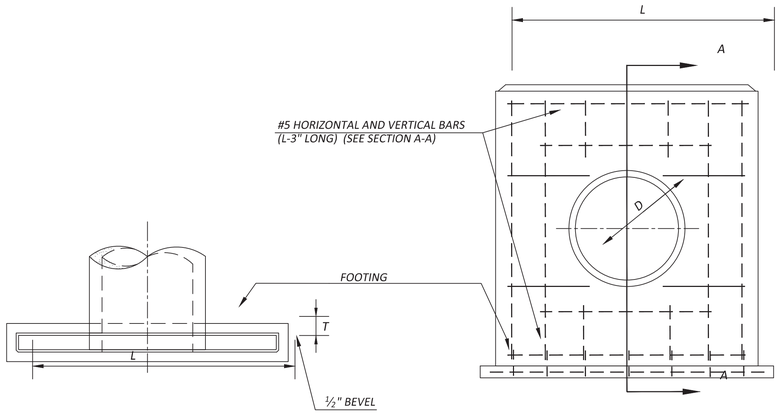

TYPE "A" HEADWALL
(NOT TO SCALE)

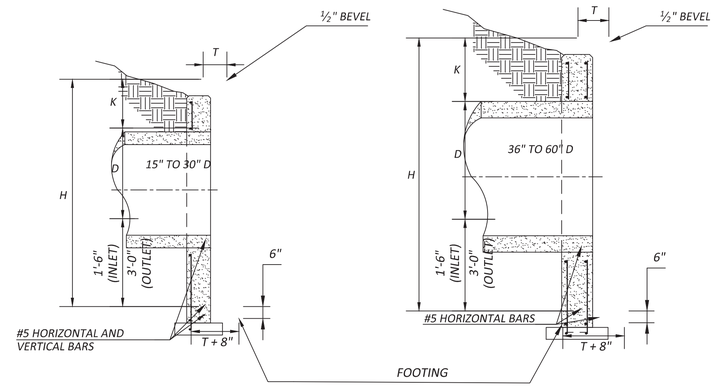

SECTION A-A
(NOT TO SCALE)

TYPE "A" HEADWALL					
DIMENSIONS					
D	H		L	K	T
	INLET	OUTLET			
15"	3'-9"	5'-3"	3'-3"	1'-0"	6"
18"	4'-0"	5'-6"	3'-6"	1'-0"	6"
21"	4'-3"	5'-9"	4'-6"	1'-0"	6"
24"	4'-6"	6'-0"	4'-10"	1'-0"	6"
30"	5'-1"	6'-7"	5'-10"	1'-1"	6"
36"	5'-7"	7'-1"	6'-8"	1'-1"	8"
42"	6'-2"	7'-8"	7'-10"	1'-2"	8"
48"	6'-8"	8'-2"	9'-10"	1'-2"	8"
54"	7'-3"	8'-9"	10'-2"	1'-3"	8"
60"	7'-9"	9'-3"	11'-2"	1'-3"	8"

NOTE: ALL REINFORCING STEEL SHALL BE #5 BARS, PLACED AS SHOWN.

END GUARD			
PIPE SIZE D	NO. OF VERT. BARS	NO. OF HORIZ. BARS	LBS. STEEL EA. HEADWALL
15"	0	2	14
18"	0	2	15
21"	1	2	24
24"	1	3	34
30"	1	4	46
36"	1	5	61
42"	2	6	88
48"	2	7	107
54"	2	8	127
60"	3	9	163

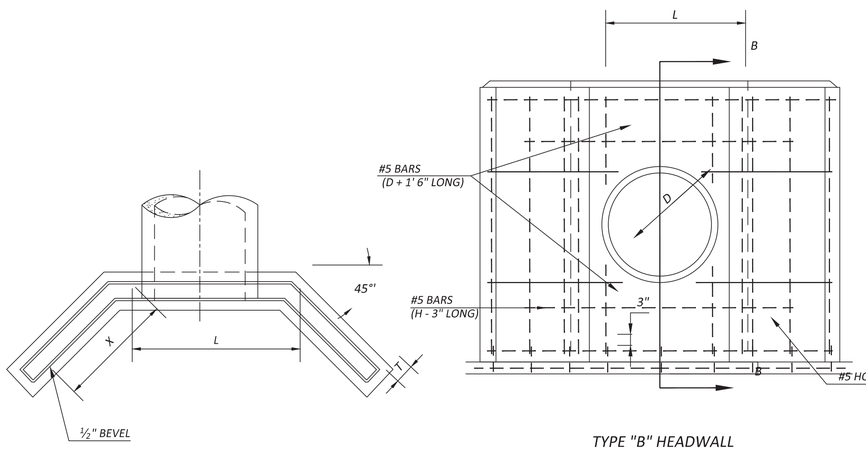

TYPE "B" HEADWALL
(NOT TO SCALE)

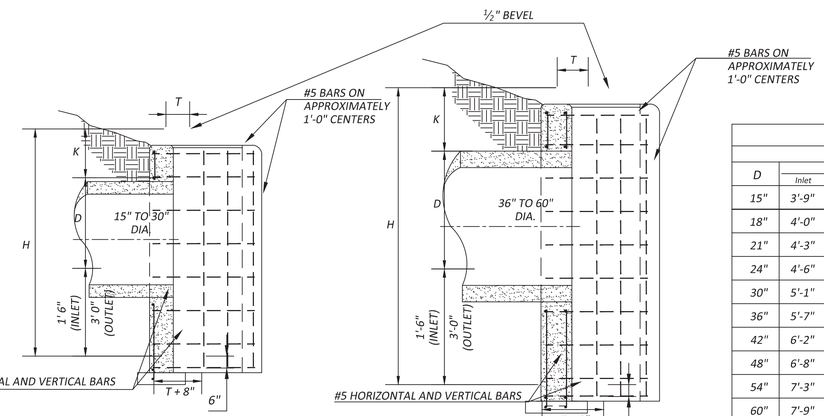

SECTION B-B
(NOT TO SCALE)

TYPE "B" HEADWALL						
DIMENSIONS						
D	H		L	K	X	T
	Inlet	Outlet				
15"	3'-9"	5'-3"	2'-2"	1'-0"	1'-0"	6"
18"	4'-0"	5'-6"	2'-5"	1'-0"	1'-0"	6"
21"	4'-3"	5'-9"	2'-9"	1'-0"	1'-3"	6"
24"	4'-6"	6'-0"	3'-0"	1'-0"	1'-6"	6"
30"	5'-1"	6'-7"	3'-7"	1'-1"	2'-0"	6"
36"	5'-7"	7'-1"	4'-2"	1'-1"	2'-0"	8"
42"	6'-2"	7'-8"	4'-9"	1'-2"	2'-6"	8"
48"	6'-8"	8'-2"	6'-0"	1'-2"	3'-0"	8"
54"	7'-3"	8'-9"	6'-6"	1'-3"	3'-6"	8"
60"	7'-9"	9'-3"	7'-0"	1'-3"	3'-6"	8"

NOTE: ALL REINFORCING STEEL SHALL BE #5 BARS, PLACED AS SHOWN.

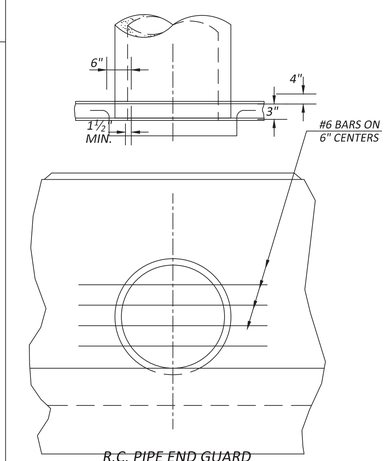

R.C. PIPE END GUARD
(NOT TO SCALE)

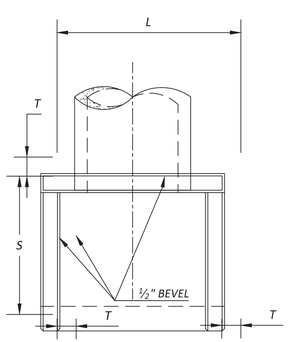

TYPE "C" HEADWALL
(NOT TO SCALE)

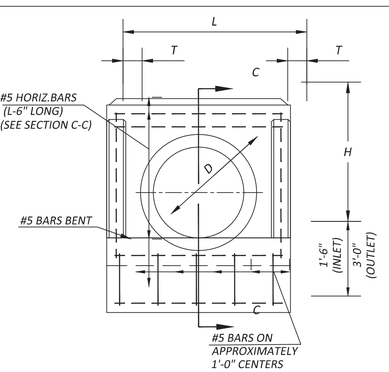

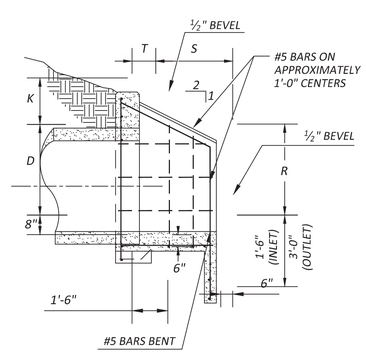

SECTION C-C
(NOT TO SCALE)

TYPE "C" HEADWALL						
DIMENSIONS						
D	H	L	K	S	R	T
15"	2'-3"	3'-2"	1'-0"	1'-10"	1'-0"	6"
18"	2'-6"	3'-5"	1'-0"	2'-1"	1'-2"	6"
21"	2'-9"	3'-9"	1'-0"	2'-4"	1'-3"	6"
24"	3'-0"	4'-0"	1'-0"	2'-6"	1'-5"	6"
30"	3'-7"	4'-7"	1'-1"	3'-1"	1'-8"	6"
36"	4'-1"	5'-6"	1'-1"	4'-0"	1'-9"	8"
42"	4'-8"	6'-1"	1'-2"	4'-10"	1'-11"	8"
48"	5'-2"	7'-2"	1'-2"	5'-9"	2'-0"	8"
54"	5'-9"	7'-9"	1'-3"	6'-7"	2'-3"	8"
60"	6'-3"	8'-4"	1'-3"	7'-4"	2'-3"	8"

NOTE: ALL REINFORCING STEEL SHALL BE #5 BARS, PLACED AS SHOWN.

NOTES:

1. ALL REINFORCING STEEL SHALL BE DEFORMED BARS CONFORMING TO A.S.T.M. SERIAL DESIGNATION A-305-507 AND SHALL SATISFY
2. THE BEND TEST REQUIREMENTS FOR STRUCTURAL GRADE STEEL IN ACCORDANCE WITH THE REQUIREMENTS.
3. ALL CONCRETE SHALL BE L3500.
4. MINIMUM DEPTH OF EMBEDMENT FOR REINFORCING STEEL SHALL BE 2" UNLESS OTHERWISE INDICATED.
5. GROOVE END OF CONCRETE PIPE TO FACE UPSTREAM.
6. ALL REINFORCING STEEL SHALL BE EPOXY COATED.
7. INSTALL END GUARD ON INLET ENDS OF STORM SEWER SYSTEM ONLY.
8. ALL EXPOSED EDGES OF CONCRETE SHALL BE FINISHED WITH A ½" BEVEL.
9. PRECAST CONCRETE SHALL NOT BE USED UNLESS APPROVED BY CITY ENGINEER.
10. ALL HEADWALLS SHALL BE CONSTRUCTED WITH APPROPRIATELY SIZED FOOTINGS.

BRIAN D. JOHNSON LICENSED 20469 5-1-15 KANSAS PROFESSIONAL ENGINEER

NO.	DATE	DESCRIPTION	BY
.	.	.	.

City of Manhattan Kansas
PUBLIC WORKS
1101 POYNTZ AVE., MANHATTAN, KS 66502 (785) 587-2415

MANHATTAN STANDARD DETAILS
MSD 2510 HEADWALL DETAIL

CITY ENGINEER: BRIAN JOHNSON, P.E. | DESIGN BY:
CITY PROJ. #:
DATE: | DRAWN BY: | PAGE OF

PLOTTED BY: RICK PETRIE PLOT DATE: 7/30/2015 3:57 PM X:\PUBLICWORKS\ENGINEERING\ENGINEERING STANDARDS\DETAILS\CURRENT\DWGS\MSD 2510 HEADWALL DETAIL (2015-08).DWG